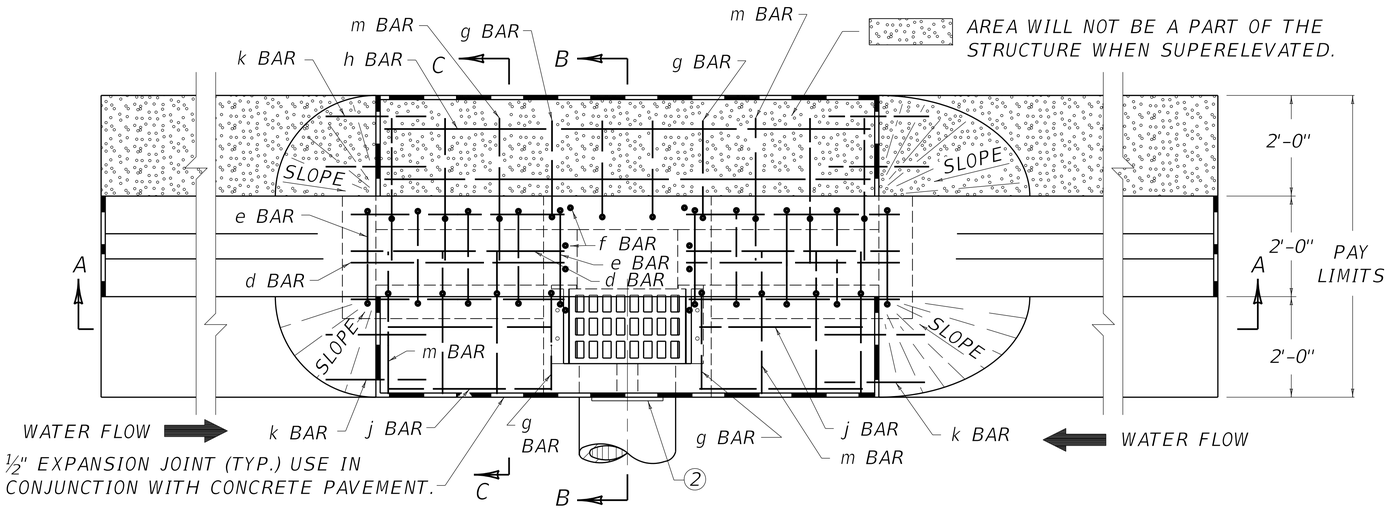

PLAN VIEW (BOX INLET TYPE A)

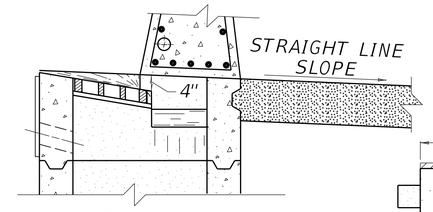

DETAIL "A"

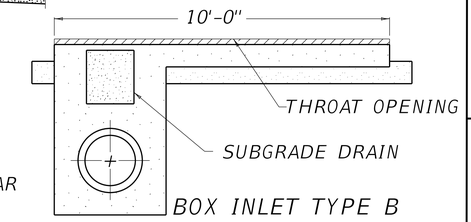

BOX INLET TYPE B

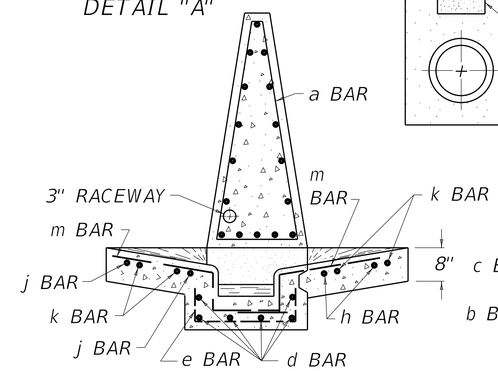

SECTION C-C

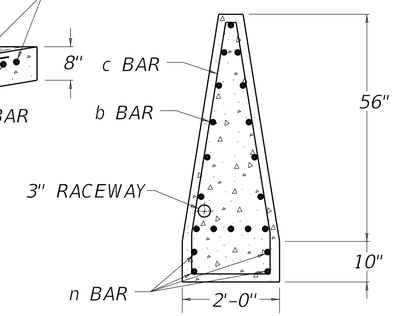

SECTION D-D

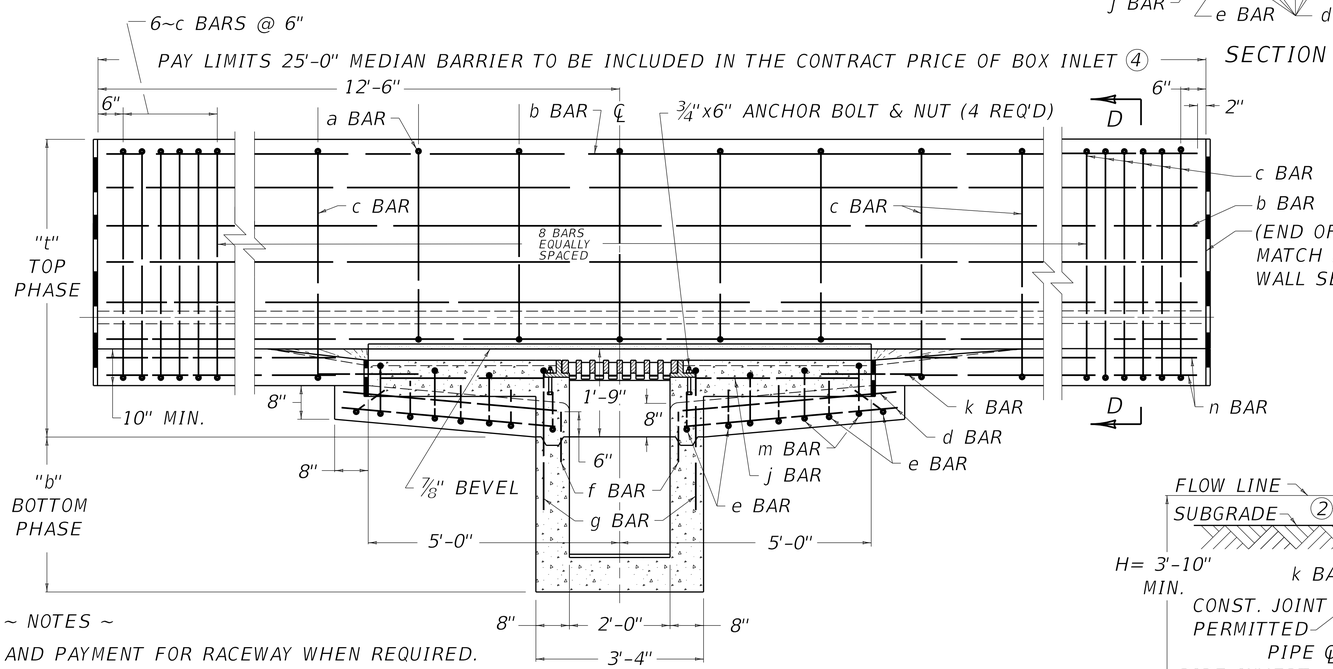

SECTION A-A

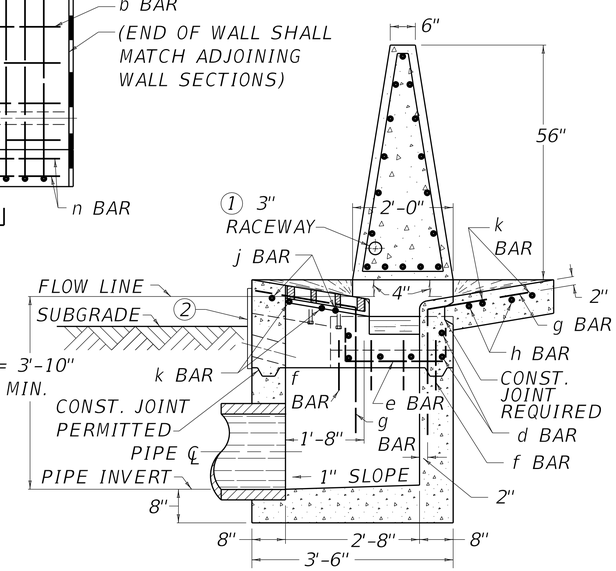

SECTION B-B

~ NOTES ~

1. SEE PLANS FOR SIZE, LOCATION, AND PAYMENT FOR RACEWAY WHEN REQUIRED.
2. FABRIC WRAPPED BACKFILL DRAIN, ONE PER WEEP HOLE.
3. ALL WALLS AND SLABS ARE 8" THICK UNLESS OTHERWISE SHOWN.
4. MEDIAN BARRIER WALL MAY BE CAST-IN-PLACE, FIXED, OR SLIP-FORMED.
5. WALL REINFORCEMENT IS DETAILED FOR CAST-IN-PLACE WALLS AND SLIP FORMED WALLS. SEE CURRENT SHEET, SHEET 006 , FOR STEEL DETAIL.
6. DETAIL "A" SHOWS BOX INLET AND THE 25' CONCRETE MEDIAN BARRIER IN SUPERELEVATION.
7. PLAN VIEW DOES NOT SHOW STEEL REINFORCEMENT IN THE CONCRETE MEDIAN BARRIER.

USE WITH CURRENT SHEETS, SHEET 006 AND SHEET 010.

REVISION DATE: 08/11/2025
REVISION NUMBER: 0

SUBMITTED — DIVISION DIRECTOR — DATE 08-11-2025
APPROVED — STATE HIGHWAY ENGINEER — DATE 08-11-2025

BARRIERS

COMMONWEALTH OF KENTUCKY
DEPARTMENT OF HIGHWAYS
TEAM KENTUCKY TRANSPORTATION CABINET

CONCRETE BARRIER WALLS

SHEET 009: CONCRETE MEDIAN BARRIER BOX INLET TL5 56 IN

STANDARD DRAWING NUMBER
RBM-135